Altea 400

ALTEA 415A

DAS Audio Group, S.L. - C/ Islas Baleares 24 - 46988
Fuente del Jarro - Valencia - Spain - Tel. +34961340860
Updated (DD/MM/YYYY): 18/04/2024

SOUND WITH SOUL

KEY FEATURES

- Lightweight multi-purpose system
- Ultra lightweight Class D amplifier with SMPS
- User definable 24-bit DSP with LCD screen
- Presets: Live, Dance, Vocals, Bass Boost, Vocals & Mode
- Stackable 3-band EQ
- Standby Mode
- Rigging points

DESCRIPTION

The ALTEA-415A is a powered portable P.A. system with a multi-angle polypropylene enclosure that allows for use as a stage monitor.

On board is Class D two channel amplifier of exceptional quality providing a total of 800 Wpeak power. of the provides extended bandwidth, wide dynamic range and exceptionally low distortion-features hard to find on other systems in this market segment. User configurable voicing, filter and EQ modes, and gain control are achieved by way of a rotary-knob interface and LCD screen on the rear of the cabinet.

The 15MI4 loudspeaker provides accurate low frequency reproduction with a deep, powerful bass. High frequencies are handled by the M-32 FEM optimized compression driver with 1" exit offering excellent performance.

ALTEA 415A

DAS Audio Group, S.L. - C/ Islas Baleares 24 - 46988
Fuente del Jarro - Valencia - Spain - Tel. +34961340860
Updated (DD/MM/YYYY): 18/04/2024

SOUND WITH SOUL

SPECIFICATIONS

Performance

Frequency Range (-10 dB)	50 Hz - 20 kHz
Horizontal Coverage (-6 dB)	90°
Vertical Coverage	60°
Maximum Peak SPL at 1 m	128 dB

Electronics and Connectors

Nominal Amplifier Power (continuous)	400 W
Nominal Amplifier Power (peak)	800 W
Input Type	Balanced
Input Impeadance	20 kohms
Input Sensitivity	1.95 V (+8 dBu)
Audio Signal Input Connector	2 x Female XLR
AUX Input	1 x 3.5 mm Mini Jack
Audio Signal Loop Thru Connector	1 x Male XLR
Control	DAScontrol™
Current Draw 230 V / 115 V	1.0 A/2.0 A

Enclosure

Enclosure Construction	Polypropylene
Enclosure Geometry	Trapezoidal
Rigging	M8 Rigging Points
Color	Black

ALTEA 415A

DAS Audio Group, S.L. - C/ Islas Baleares 24 - 46988
Fuente del Jarro - Valencia - Spain - Tel. +34961340860
Updated (DD/MM/YYYY): 18/04/2024

SOUND WITH SOUL

Dimensions (H x W x D)	710 x 440 x 380 mm 28,0 x 17,3 x 15,0 in
Net Weight	17,5 kg (38,6 lb)

Components

LF Driver	15MI4
HF Driver	M-32

Shipping

Carton Dimensions (H x W x D)	805 x 530 x 445 mm 31,7 x 20,9 x 17,5 in
Shipping Weight	21,0 kg (46,3 lb)

DIMENSIONS

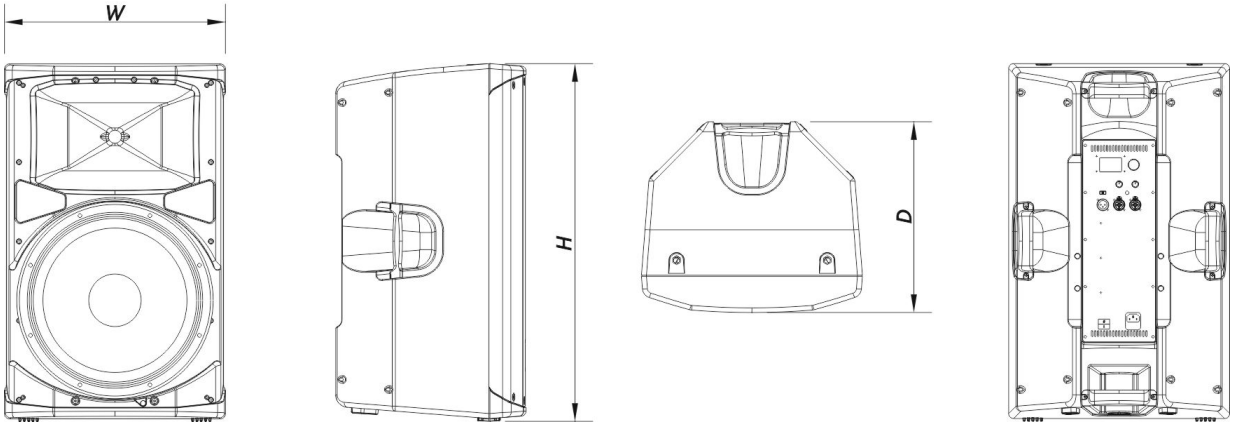

ORDERING INFORMATION

Model	Description	P/N
System		

ALTEA 415A

DAS Audio Group, S.L. - C/ Islas Baleares 24 - 46988
Fuente del Jarro - Valencia - Spain - Tel. +34961340860
Updated (DD/MM/YYYY): 18/04/2024

SOUND WITH SOUL

ALTEA-415A		10404845

Replacement Parts

15MI4	Cone Transducer	10214300
DSP-ALTEA-415A	Dsp	20406578
GM-15MI4	Recone Kit	20208280
M-32	Compression Driver	20208970
MP-ALTEA-415A		30007474

Accessories

ANL-1	Rigging Accessories	10101010
ANL-1	Installation & Stacking Acc.	10101010
AX-112-5	Installation & Stacking Acc.	10102390
FUN-AL715	Transport Accessories	10103781
TRD-6	Installation & Stacking Acc.	10104470
TRD-7	Installation & Stacking Acc.	10104471
TRPD-S2-PAK	Installation & Stacking Acc.	10104011

ALTEA 415A

DAS Audio Group, S.L. - C/ Islas Baleares 24 - 46988
Fuente del Jarro - Valencia - Spain - Tel. +34961340860
Updated (DD/MM/YYYY): 18/04/2024

SOUND WITH SOUL